PN 16 / CLASS 125 / CLASS 250

Flange Type Swing Check Valve-BS/MSS Metal Seated

Fig. 5101(PN16/Class 125)
5102(Class 250)



Valve Standard :
Comply with EN 12334(BS 5153) & MSS SP-71

Pressure Temperature Ratings

Working pressure	16bar/125Lb/250Lb
Testing Pressure	Shell:24bar/51.7 Seal:17.6bar/34.5
Working Temperature	-10℃ to 120℃
Suitable Media	Water,Oil&Gas

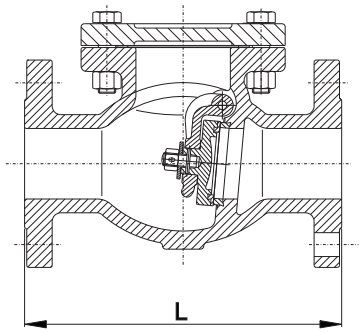

Material Specification

Part	Material	ASTM Spec.
Body	Cast Iron	A126 Class B
Disc	Cast Iron	A126 Class B
Seat Ring	Bronze	B62 C83600
Disc Ring	Bronze	B62 C83600

Dimensions

DN	mm	50	65	80	100	125	150	200	250	300	350	400	450	500	600
	inch	2	2-1/2	3	4	5	6	8	10	12	14	16	18	20	24
L(PN16/Class125)		203	216	241	292	330	356	495	622	699	787	914	914	1016	1219
L(Class250)		267	292	318	356	400	444	533	622	711	-	-	-	-	-